DANIEL
RUBINETTERIE
MILANO

SCHEDA TECNICA TECHNICAL FEATURES

ART. COD. **TK606XN**

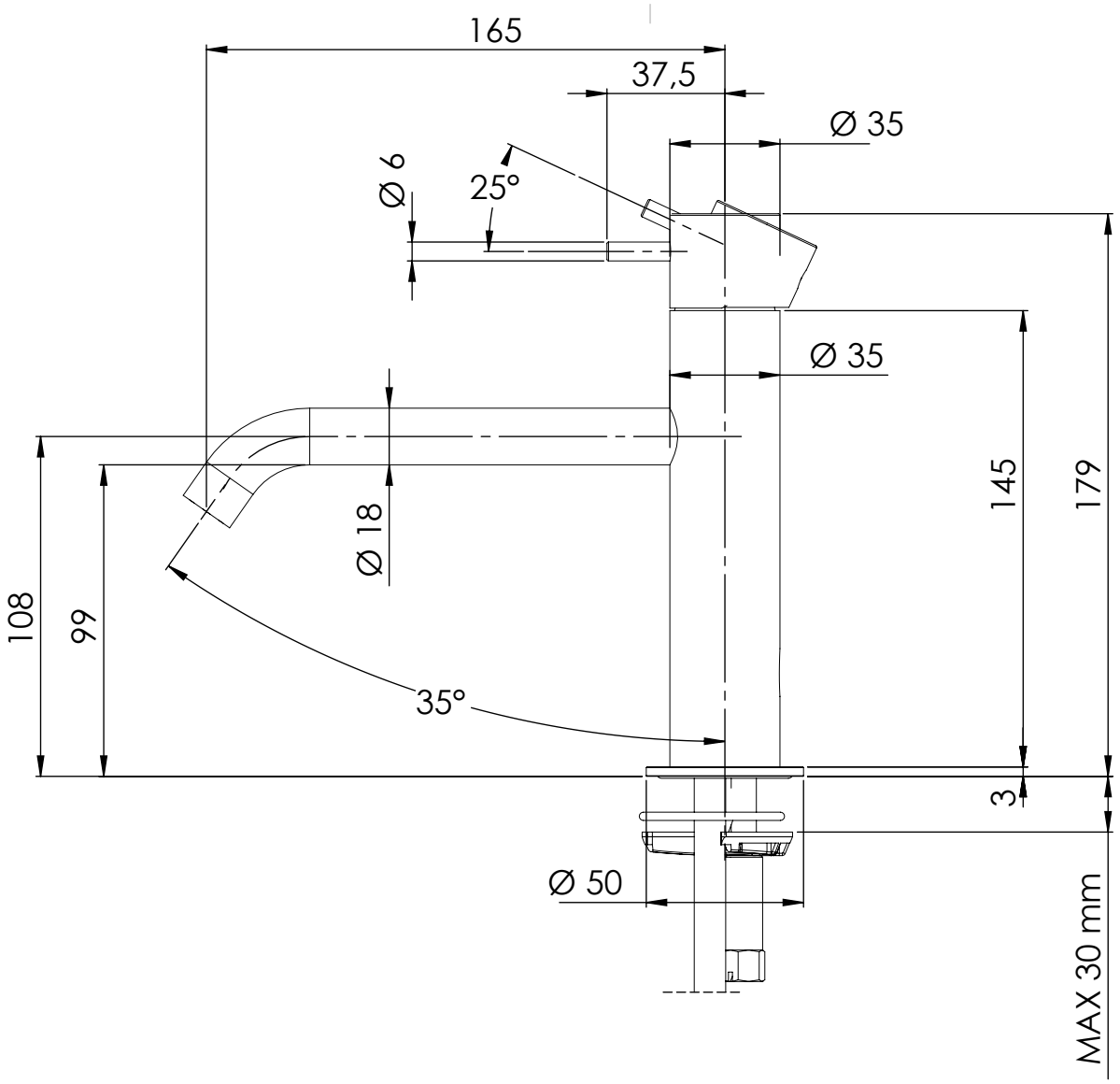

MATERIALI / MATERIALS

OTTONE CROMATO / CHROME PLATED BRASS

CROMATURA / CHROME PLATING

UNI EN 248

Via Leonardo da Vinci 53 20062 Cassano d'Adda (MI) Italy Tel. +39-0363 62651
info@daniel.it www.daniel.it