REMER
RUBINETTERIE

Serie Atelier

Cod. articolo

AL53D2PWB

Descrizione: Parti esterne per WBOX, miscelatore monocomando incasso doccia 2 vie piastre separate. Include bocca a muro e set doccia a muro con supporto doccia, flessibile e doccetta.

Description: *External parts for WBOX, 2 ways built-in shower single lever mixer on four plates. Wall mounted spout and wall mounted set with hand shower, plate and support are included.*

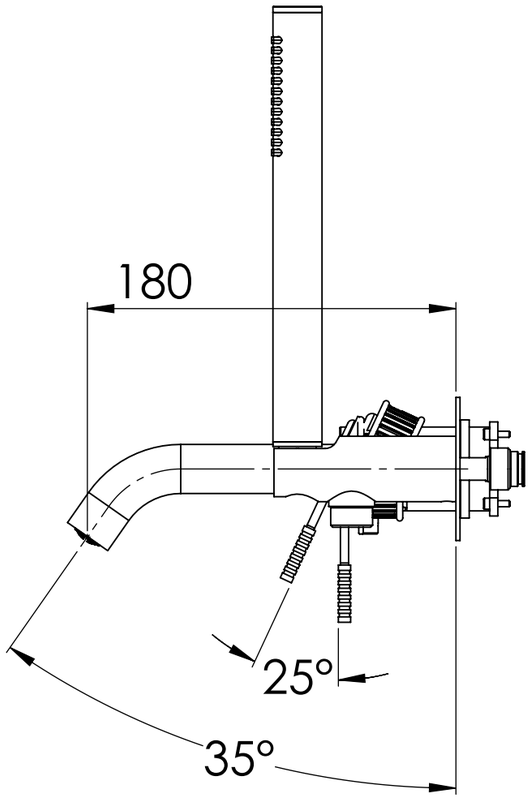

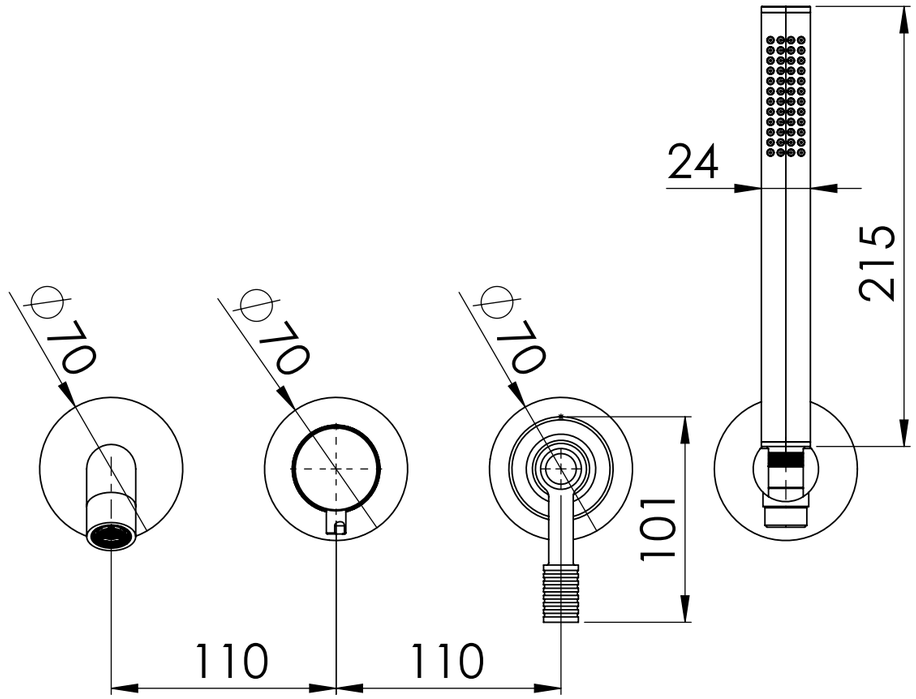

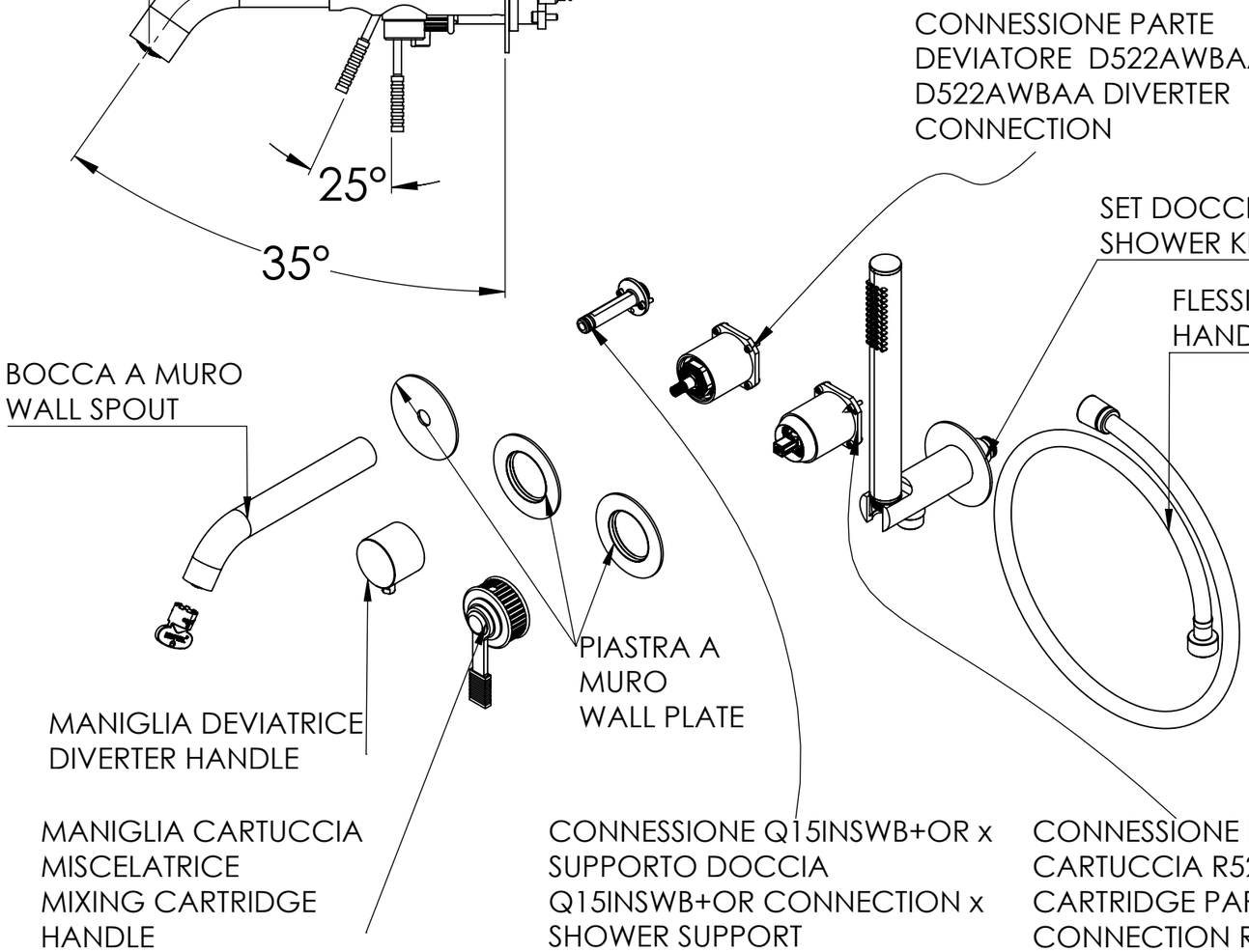

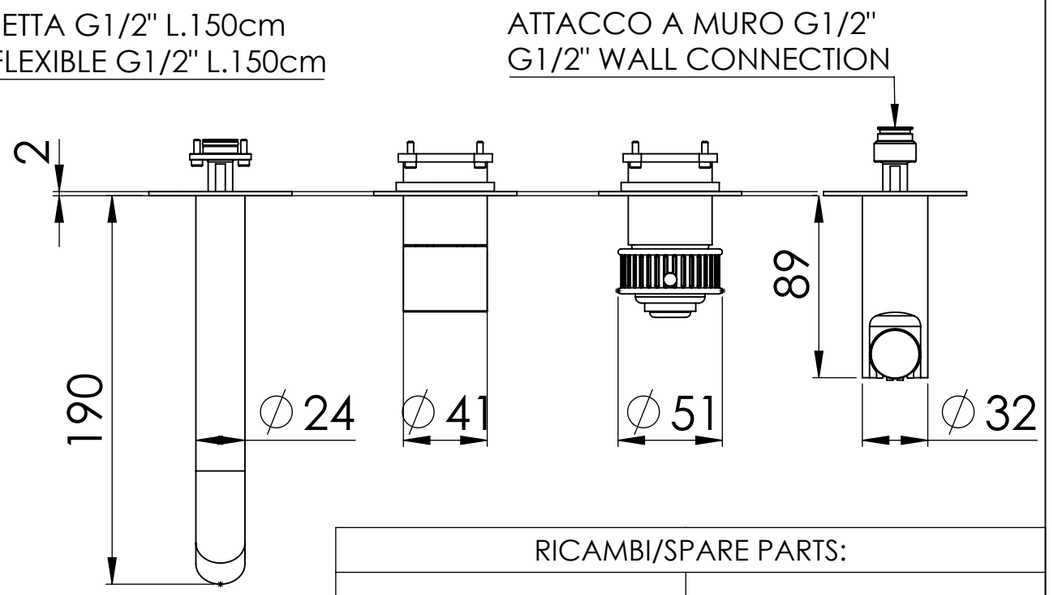

RICAMBI/SPARE PARTS:	
CARTUCCIA/CARTRIDGE	R52AP
DEVIATORE/DIVERTER	D522A
AERATORE/AERATOR	83QK72BP